ELK LIGHTING

PRODUCT SPECIFICATION SHEET

ITEM #:	31428/3
UPC	748119066585
Description	Santa Monica 3-Light Vanity Sconce in Aged Silver with Off-white Glass
Finish	Aged Silver
Materials	Glass, Metal
Brand	ELK Lighting
Collection	Santa Monica
Category	Indoor Lighting
Type	Vanity Light

ITEM DIMENSIONS	
Width	23 inches
Depth	4 inches
Height	6 inches
Weight	5 pounds

ADDITIONAL DIMENSIONS	
Backplate / Canopy	N/A
HCWO	N/A
Min. Extension	N/A
Max. Extension	N/A

OVERALL HEIGHT			
Min.	N/A	**Max.**	N/A

EXTENSION ROD(S)
N/A

RATINGS & SPECIFICATIONS			
Safety Rating	N/A	**Certification**	N/A
ADA Compliant	N/A	**Voltage**	N/A

BULBS / SOCKETS			
Quantity	3	**Wattage**	60 watts
Included	Yes	**Type**	G9 (G9 Base)
Other	N/A		

CHAIN / CORD INFORMATION			
Chain	N/A	**Cord**	N/A

SHADE / GLASS DETAILS			
Shade/Glass Description	Off-white Glass		
Width	N/A	**Height**	N/A
Width at Top	N/A	**Width at Bottom**	N/A

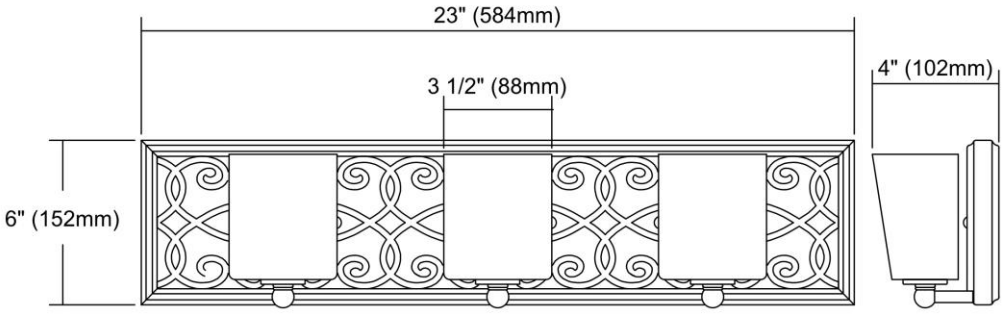

Rev. 5/9/2019