- Be sure to read and understand all instruction sheets completely before beginning assembly or installation.
- All assembly and installation work must be performed by qualified personnel, in accordance with all applicable national and local building and electrical codes.
- Be aware that the weight of some fixtures may exceed the strength rating of the 4" electrical junction box or other such hardware at your site. In all cases, it is the responsibility of the contractor to properly secure the fixture to the structure, and to provide adequate support for the fixture.
- Due to constant production improvements, details of the design, material or finish may change in any way that will not significantly alter installed appearance or reduce function or performance.

© East Taunton, MA 02718 (508) 977-9991

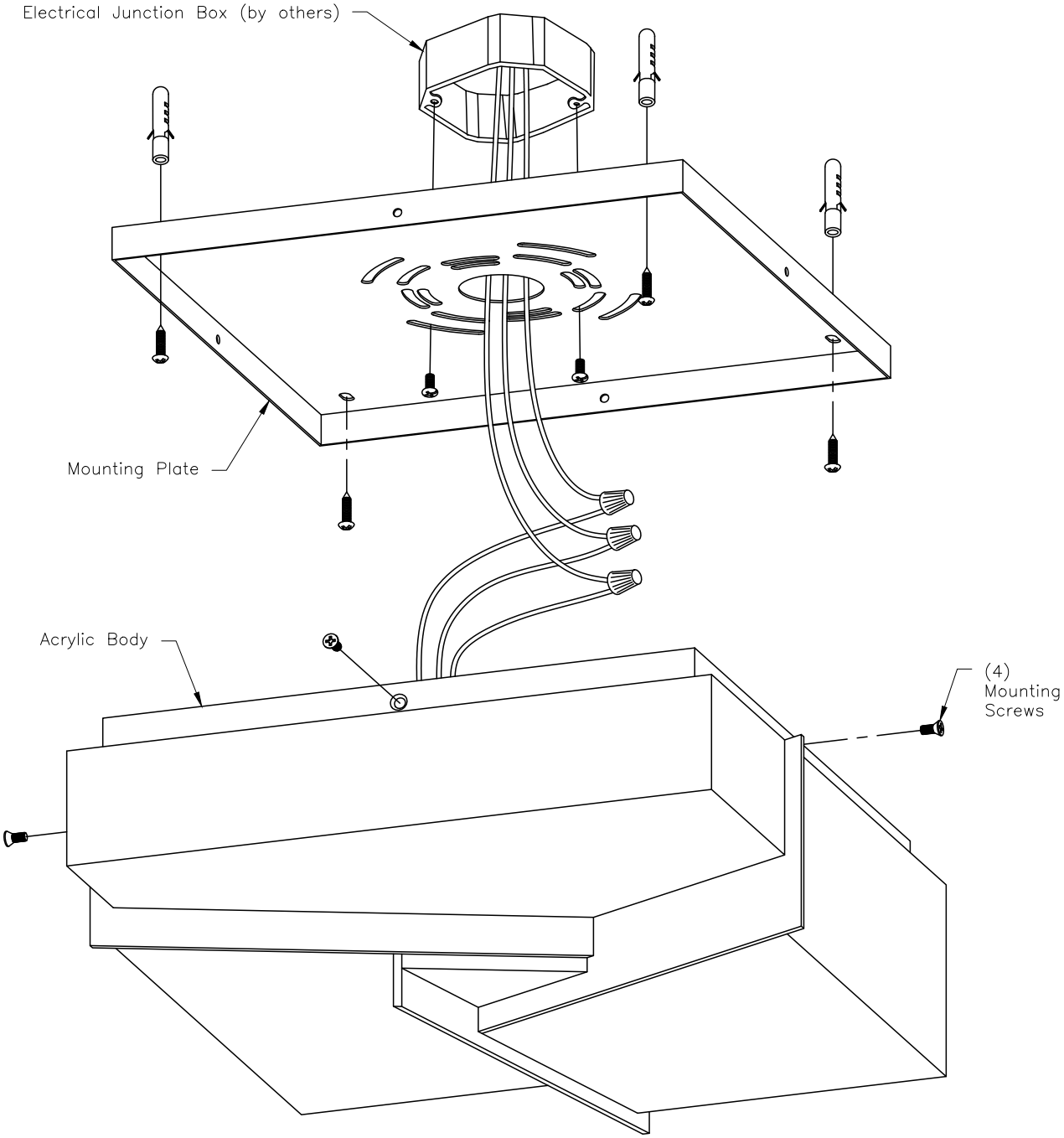

Fixture Installation:

A) Secure the Mounting Plate to the electrical junction box (by others). You may use additional mounting hardware, suitable for your ceiling structure, to secure the fixture directly to the ceiling.

B) Raise the Acrylic Body of the fixture to the ceiling, and make all necessary electrical connections between the fixture and the electrical junction box: Green/bare copper to ground; White/Blue to White (neutral); Black/Brown to Black (line voltage).

C) Mate the Acrylic Body with the Mounting Plate, and secure in place using the (4) Screws provided.

D) Restore power to the circuit and test fixture operation to complete installation.

REV.	BY	DATE	DESCRIPTION
.	.	.	.

INSTRUCTIONS	DRAWN BY: MDT	SHEET #: SHEET 1 OF 1
Candeau Flush Mount		
DATE: Apr 14, 2020	DWG: 201414-A-INST-A0	

FILENAME:
5396 INSTALLATION SHEET 201414-A