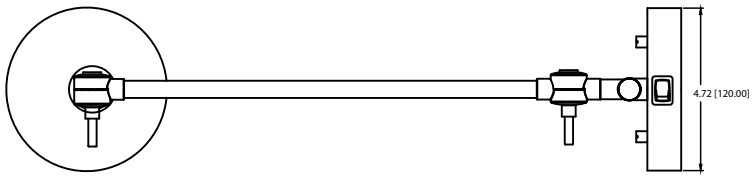
4.72 [120.00]

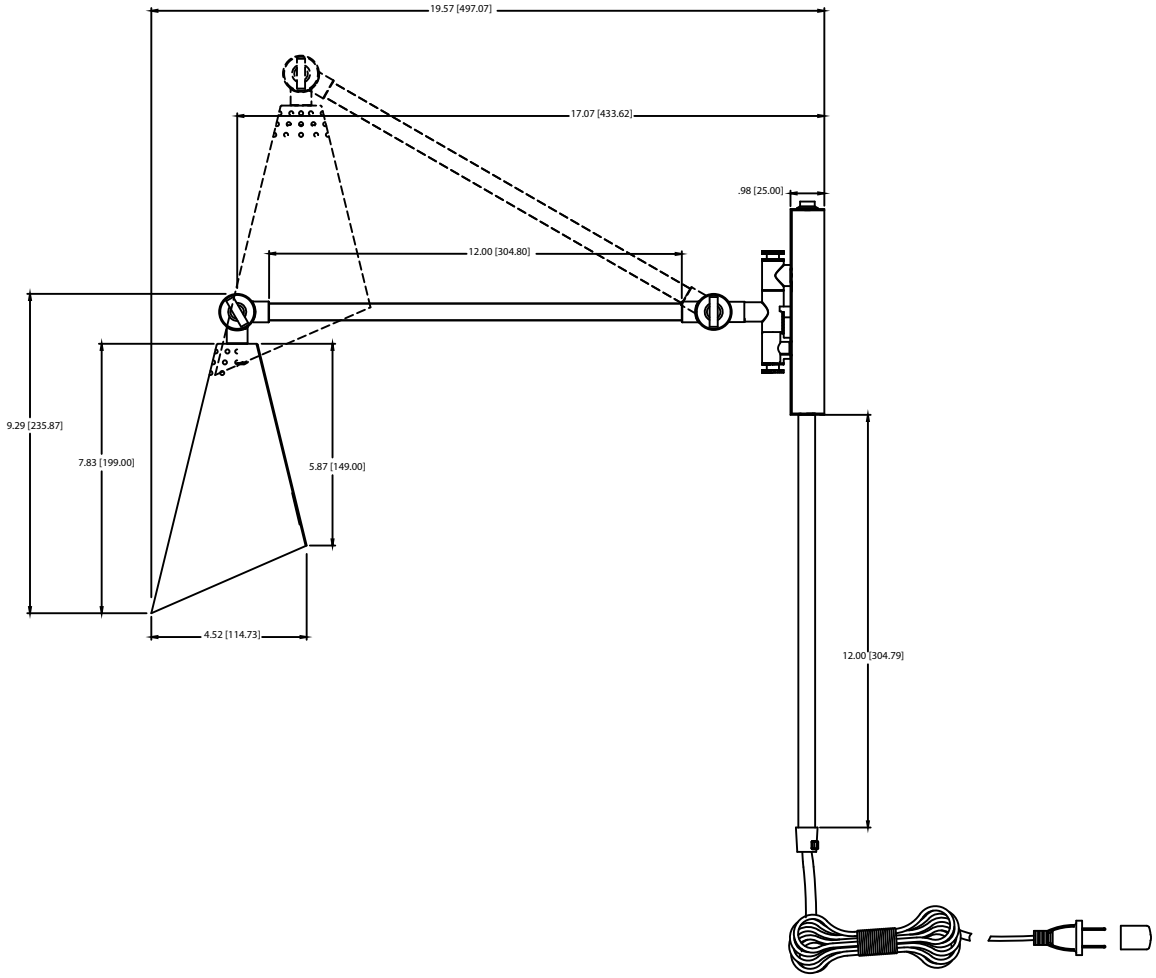
19.57 [497.07]
17.07 [433.62]
.98 [25.00]
12.00 [304.80]
9.29 [235.87]
7.83 [199.00]
5.87 [149.00]
4.52 [114.73]
12.00 [304.79]