A divsion of ELK Group International

SPECIFICATION SHEET
31" STONE
VANITY TOP

GRUT310BK | MAUT310CM | MAUT310DE | MAUT310WT

FEATURES
- Natural Black Granite, or Dark Emperador, Galala Beige or White Carrara Marble
- Natural surface variations and markings
- Available in five standard sizes - 25", 31", 37", 49" and 61" sizes
- Top pre-cut for 8" widespread faucet and Vitreous China undermount
- Backsplash included

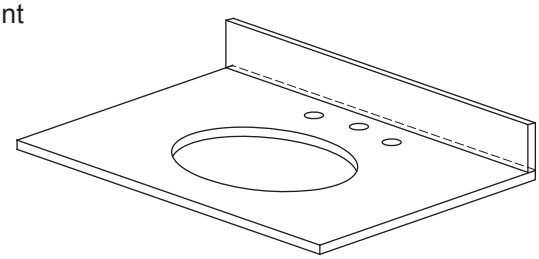

COLORS / FINISHES
- BK: Black Granite
- CM: Galala Beige Marble
- DE: Dark Emperador Marble
- WT: White Carrara Marble

NOMINAL DIMENSIONS
- 31" Width x 22" Depth x .75" Thick (Black Granite Only)
- 31" Width x 22" Depth x 1" Thick

SPECIFIED MODEL

MODEL	DESCRIPTION	COLORS / FINISHES
GRUT310BK	31" Stone Vanity Top	☐ Black Granite
MAUT310WT	31" Stone Vanity Top	☐ White Carrara Marble
MAUT310CM	31" Stone Vanity Top	☐ Galala Beige Marble
MAUT310DE	31" Stone Vanity Top	☐ Dark Emperador Marble

RECOMMENDED COMPONENTS		
CUM177OV	18" Vitreous China Oval Undermount	☐ White
UM110BN/CP	Ryvyr Umbrella Drain with Overflow	☐ Brushed Nickel ☐ Chrome
GRSS210BK	Stone Side Splash	☐ Black Granite
MASS210WT	Stone Side Splash	☐ White Carrara Marble
MASS210CM	Stone Side Splash	☐ Galala Beige Marble
MASS210DE	Stone Side Splash	☐ Dark Emperador Marble

PRODUCT DIAGRAM

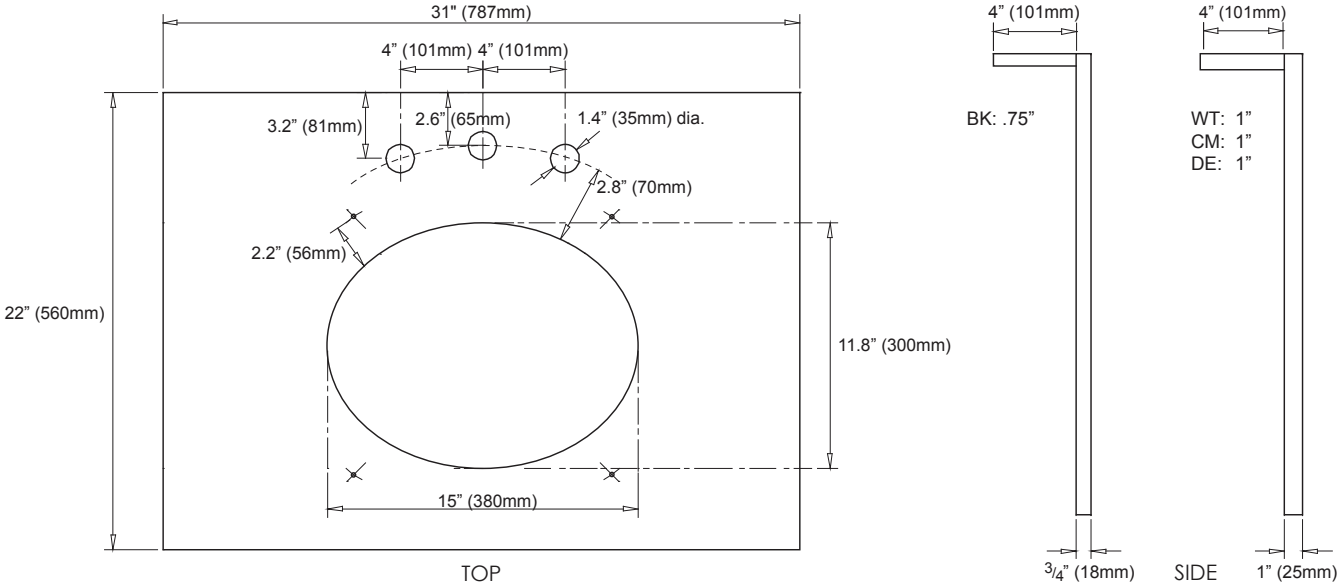

* Please note that all stated sizes of Ryvyr's products are nominal and subject to variations of + or – 1/4 inch (wood, glass) and + or – 3/8 inch (stone, ceramic).

01.2017