SPECIFICATION SHEET
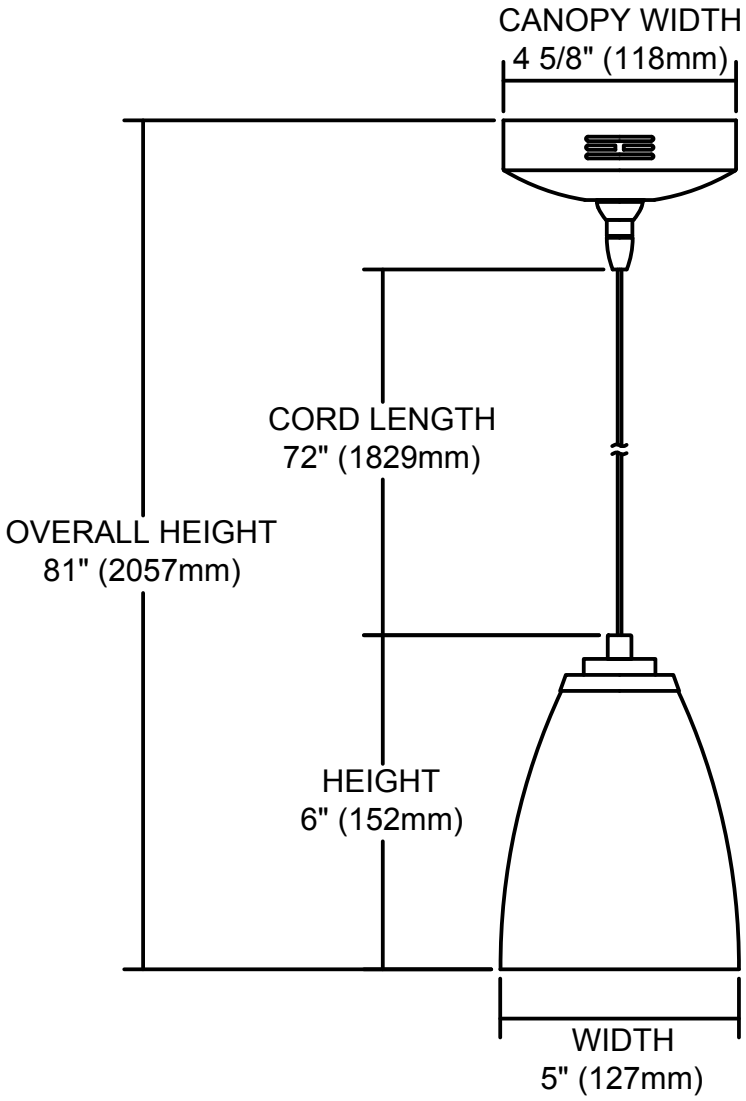
	ITEM TYPE	PENDANT
	WIDTH	5”(127MM)
	HEIGHT	6”(152MM)
	DEPTH	
	WEIGHT	1LBS (0.454KG)
	LAMP	(1)MR16
	MAX WATTAGE	50W
	FINISH	OIL RUBBED BRONZE
ITEM#: PF1000/1-MR16 -ORB-ES	CORD LENGTH	72”(1829MM)
	CORD COLOR	SILVER