RYVYR™

SPECIFICATION SHEET

REFLEX

GLASS VESSEL

RVE175EMB

FEATURES

- depth, clarity and strength of tempered glass
- 5/8" thickness

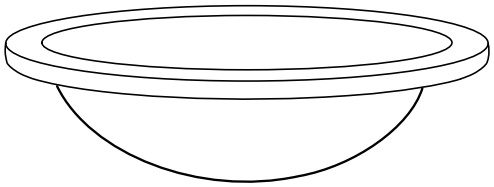

COLORS / FINISHES

- Ember

NOMINAL DIMENSIONS

- 17 5/8" Diameter x 5 3/4" Height

SPECIFIED MODEL

MODEL	DESCRIPTION	COLORS / FINISHES
RVE175EMB	Glass Vessel - Round	☐ Ember

RECOMMENDED COMPONENTS		
UM100CP / BN	Umbrella Pop-up Drain	☐ Chrome ☐ Brushed Nickel

PRODUCT DIAGRAM

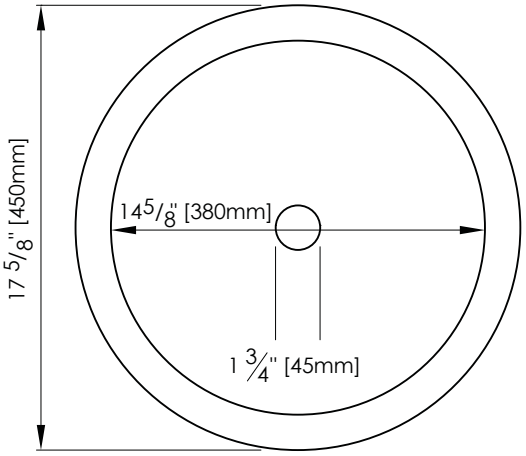

TOP

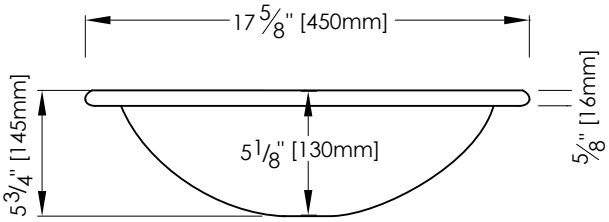

FRONT