RYVYR®

A division of ELK Group International

SPECIFICATION SHEET

ARAS™

VANITY

V-ARAS-80MBK | V-ARAS-80MDG

FEATURES

- Wall-mount with or without legs (sold separately). Attach legs prior to mounting.
- Legs are adjustable to accommodate either an integral sink top or a vessel sink
- Mix or match the two finish options for the vanity and the legs
- Compartmentalized interior top drawer is ideal for organizing small items

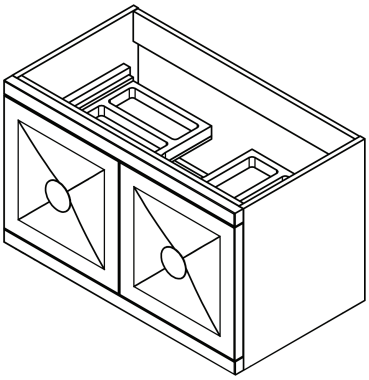

COLORS / FINISHES

- BK: Black
- DG: Dove Grey

NOMINAL DIMENSIONS

- 31.5" Width x 17.75" Depth x 19" Height | 800 x 450 x 483mm

SPECIFIED MODEL

MODEL	DESCRIPTION	COLORS / FINISHES	
V-ARAS-80MBK/MDG	80mm ARAS Vanity	☐ Black	☐ Dove Grey

RECOMMENDED COMPONENTS			
L-ARAS-38MBK/MDG	ARAS Legs (optional design feature)	☐ Black	☐ Dove Grey
CST81MWT	Ceramic integral sink top	☐ White	
GST81MBK	Glass integral sink top	☐ Black	
RES81MWT	Resin integral sink top	☐ White	
Drain Kit	Ryvyr Umbrella Drain	☐ Brushed Nickel	☐ Chrome

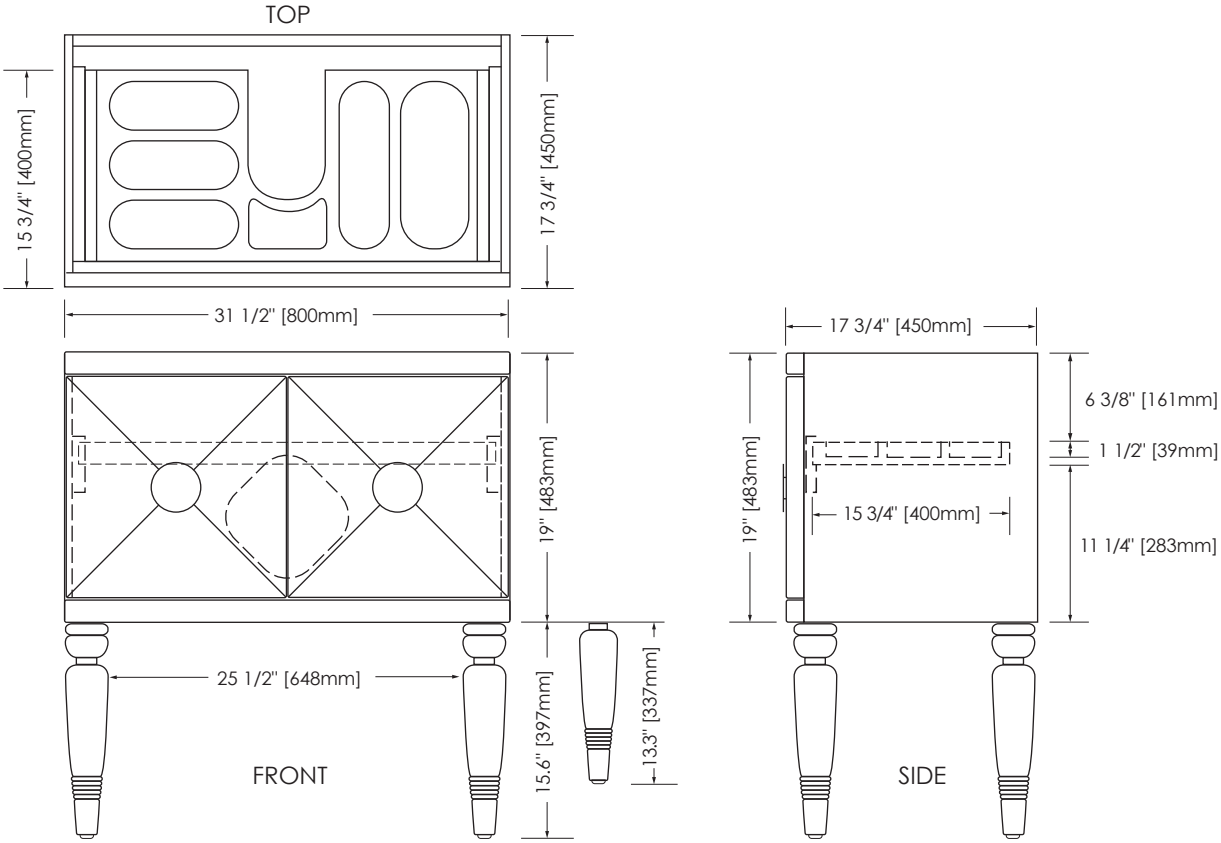

* Please note that all stated sizes are nominal and may vary slightly within the normal range of tolerances. Measurements were taken to outside edges.

05.2019